PRO5 FREEHUB ASSEMBLY
E-BIKE_MICRO_SPLINE_54

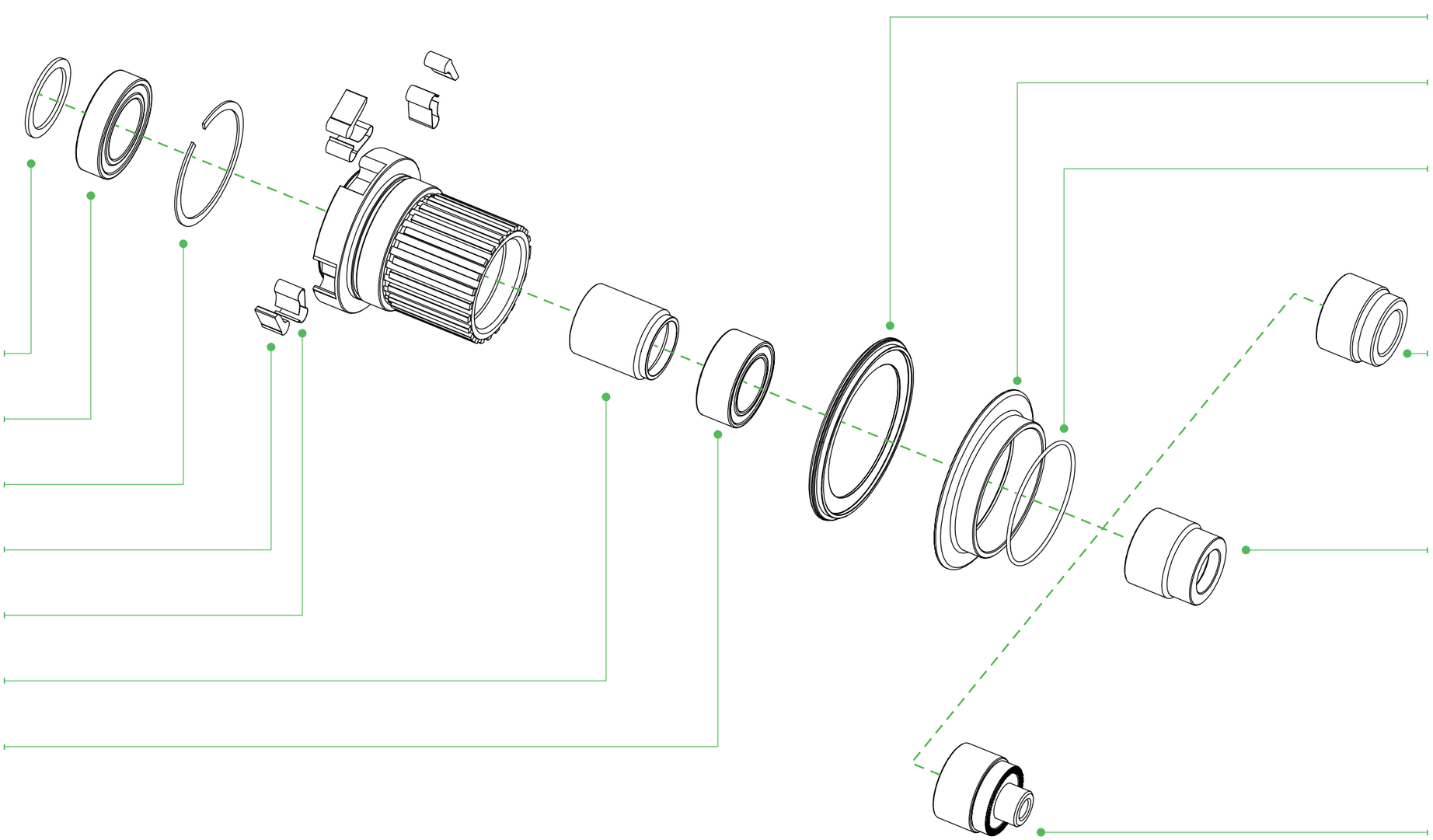

REF: HUB558

HOPETECH.COM