PRO5 FREEHUB ASSEMBLY
E-BIKE_HG_54

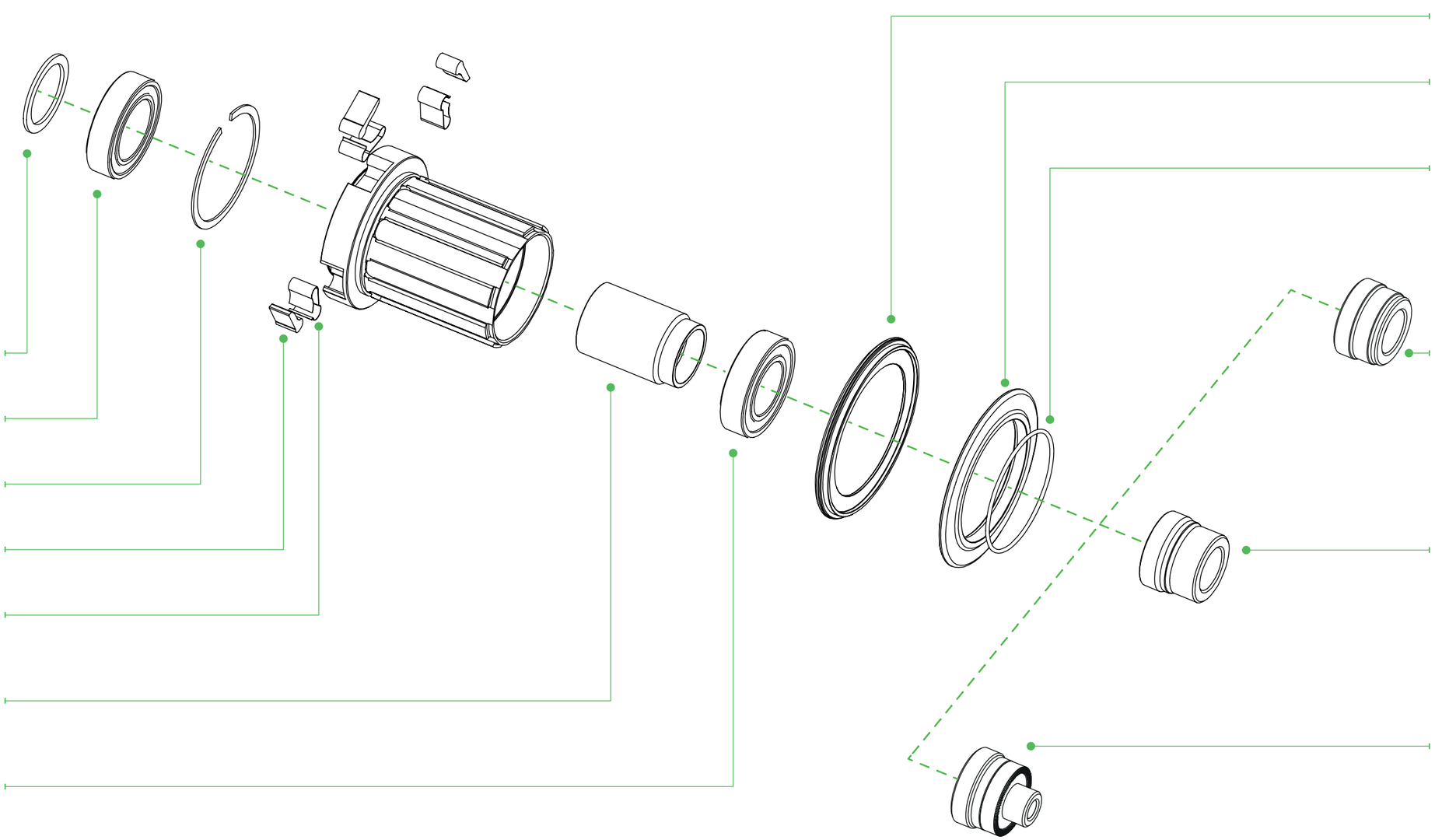

REF: HUB556