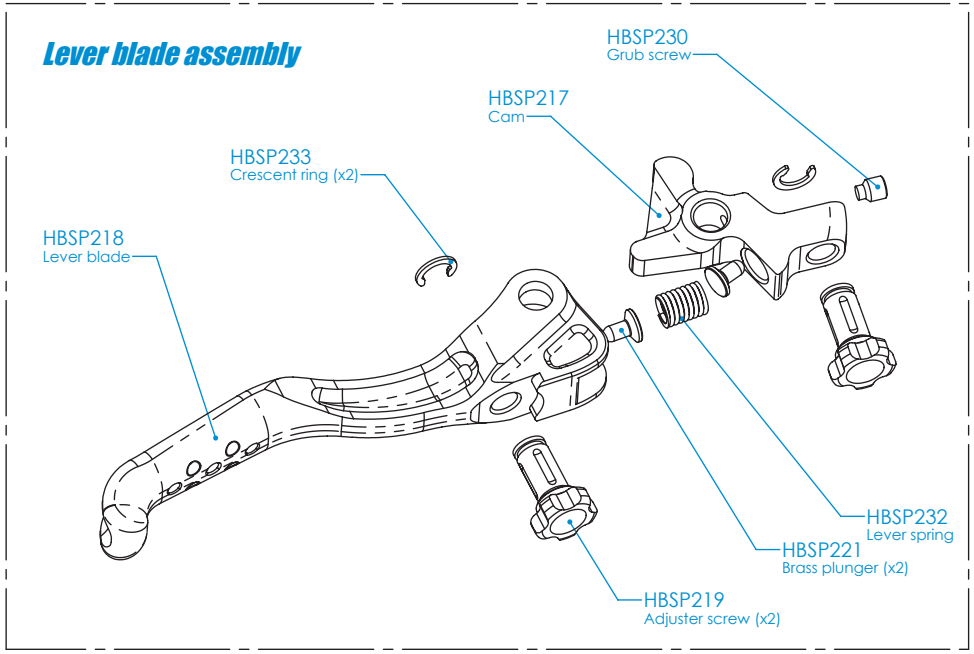
Lever blade assembly
HBSP230
Grub screw
HBSP217
Cam
HBSP233
Crescent ring (x2)
HBSP218
Lever blade
HBSP232
Lever spring
HBSP221
Brass plunger (x2)
HBSP219
Adjuster screw (x2)

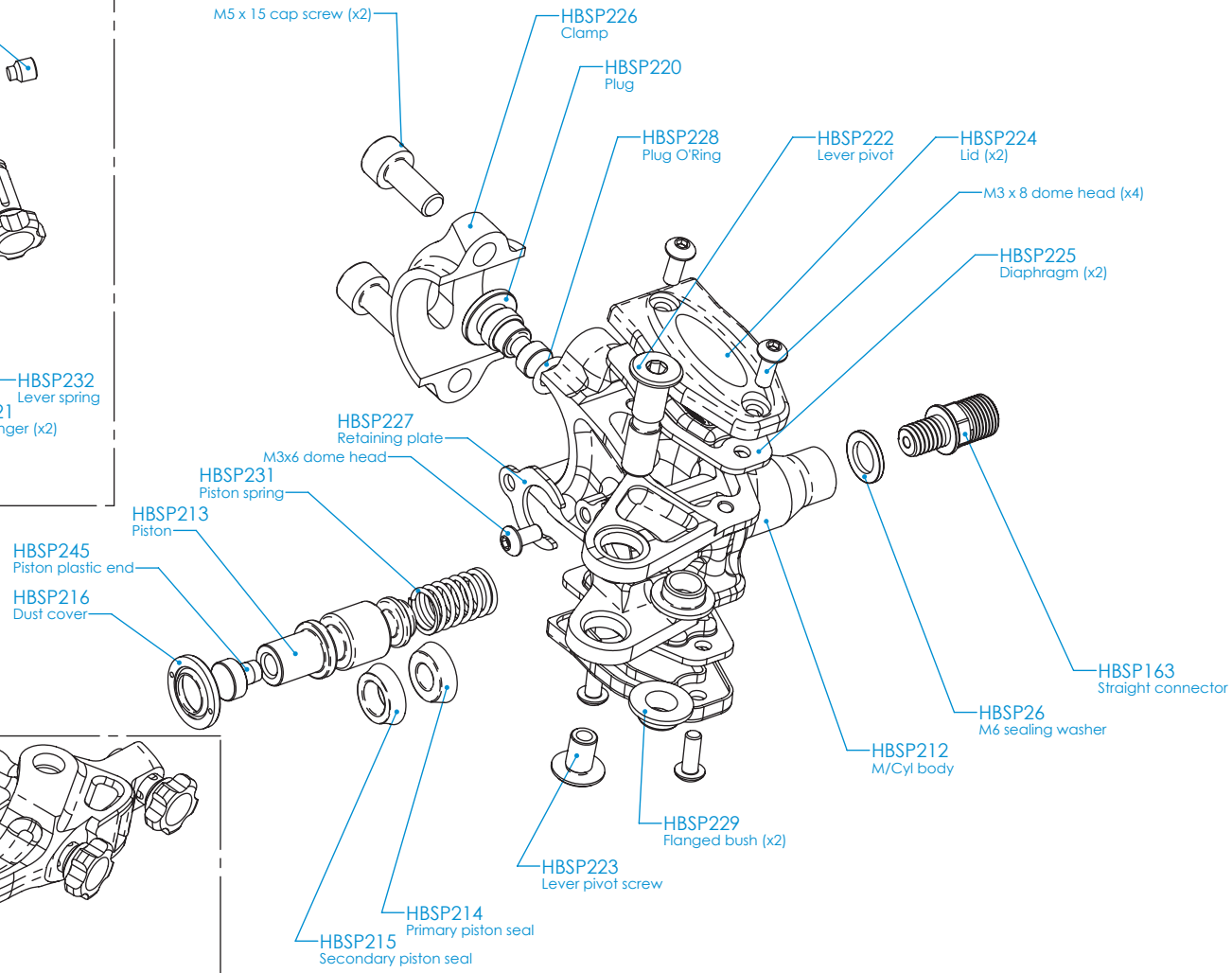
M5 x 15 cap screw (x2)
HBSP226
Clamp
HBSP220
Plug
HBSP228
Plug O'Ring
HBSP222
Lever pivot
HBSP224
Lid (x2)
M3 x 8 dome head (x4)
HBSP225
Diaphragm (x2)
HBSP227
Retaining plate
M3x6 dome head
HBSP231
Piston spring
HBSP213
Piston
HBSP245
Piston plastic end
HBSP216
Dust cover
HBSP163
Straight connector
HBSP26
M6 sealing washer
HBSP212
M/Cyl body
HBSP229
Flanged bush (x2)
HBSP223
Lever pivot screw
HBSP214
Primary piston seal
HBSP215
Secondary piston seal

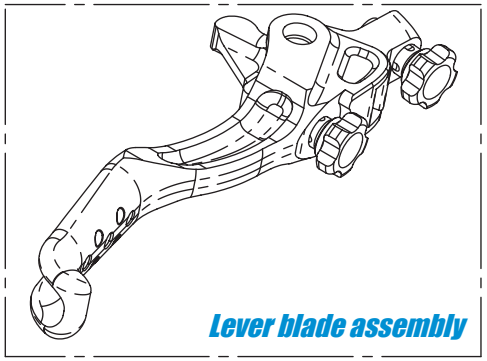
Lever blade assembly