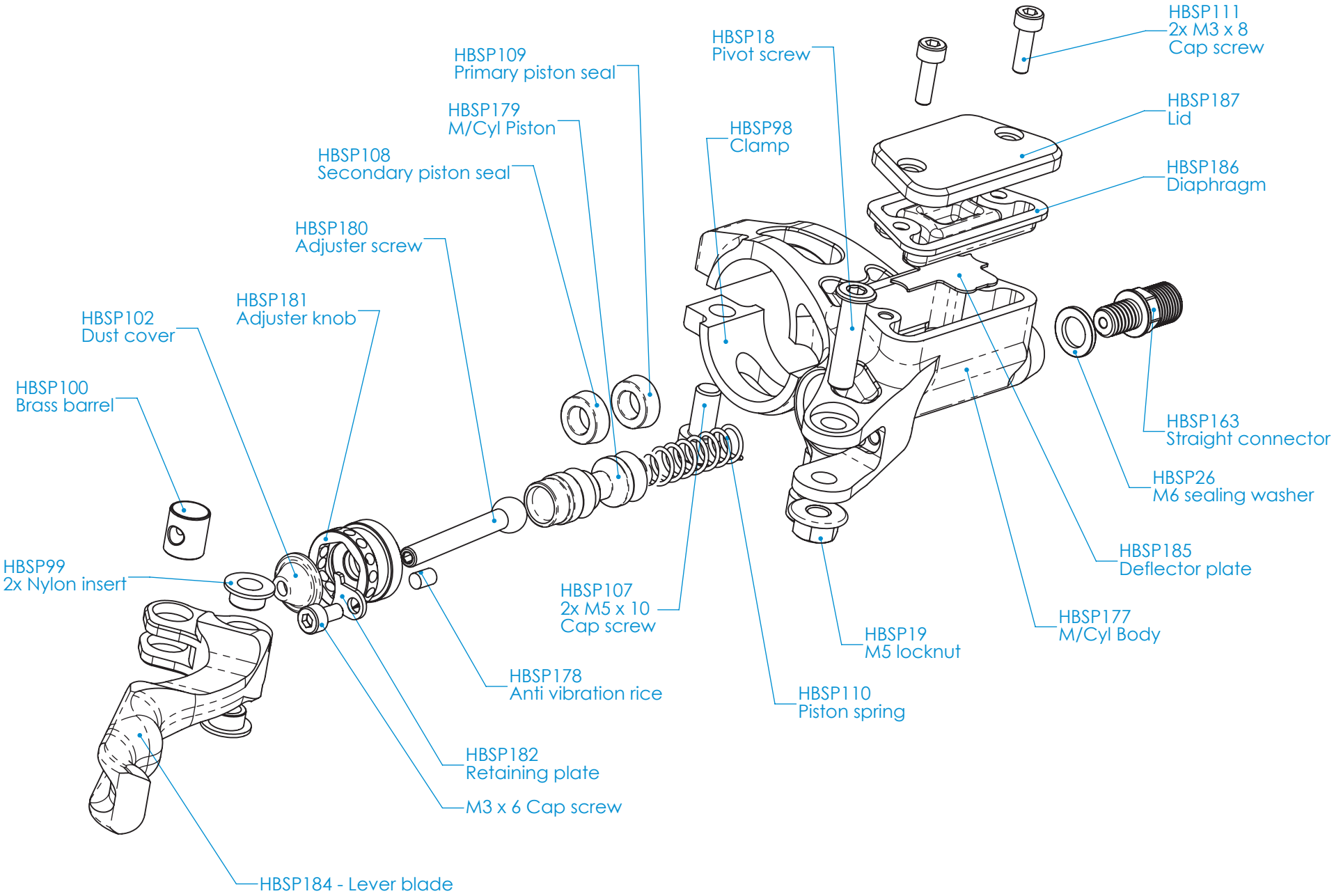
HBSP111
2x M3 x 8
Cap screw
HBSP18
Pivot screw
HBSP109
Primary piston seal
HBSP187
Lid
HBSP179
M/Cyl Piston
HBSP98
Clamp
HBSP108
Secondary piston seal
HBSP186
Diaphragm
HBSP180
Adjuster screw
HBSP181
Adjuster knob
HBSP102
Dust cover
HBSP100
Brass barrel
HBSP163
Straight connector
HBSP26
M6 sealing washer
HBSP185
Deflector plate
HBSP99
2x Nylon insert
HBSP107
2x M5 x 10
Cap screw
HBSP177
M/Cyl Body
HBSP19
M5 locknut
HBSP178
Anti vibration rice
HBSP110
Piston spring
HBSP182
Retaining plate
M3 x 6 Cap screw
HBSP184 - Lever blade