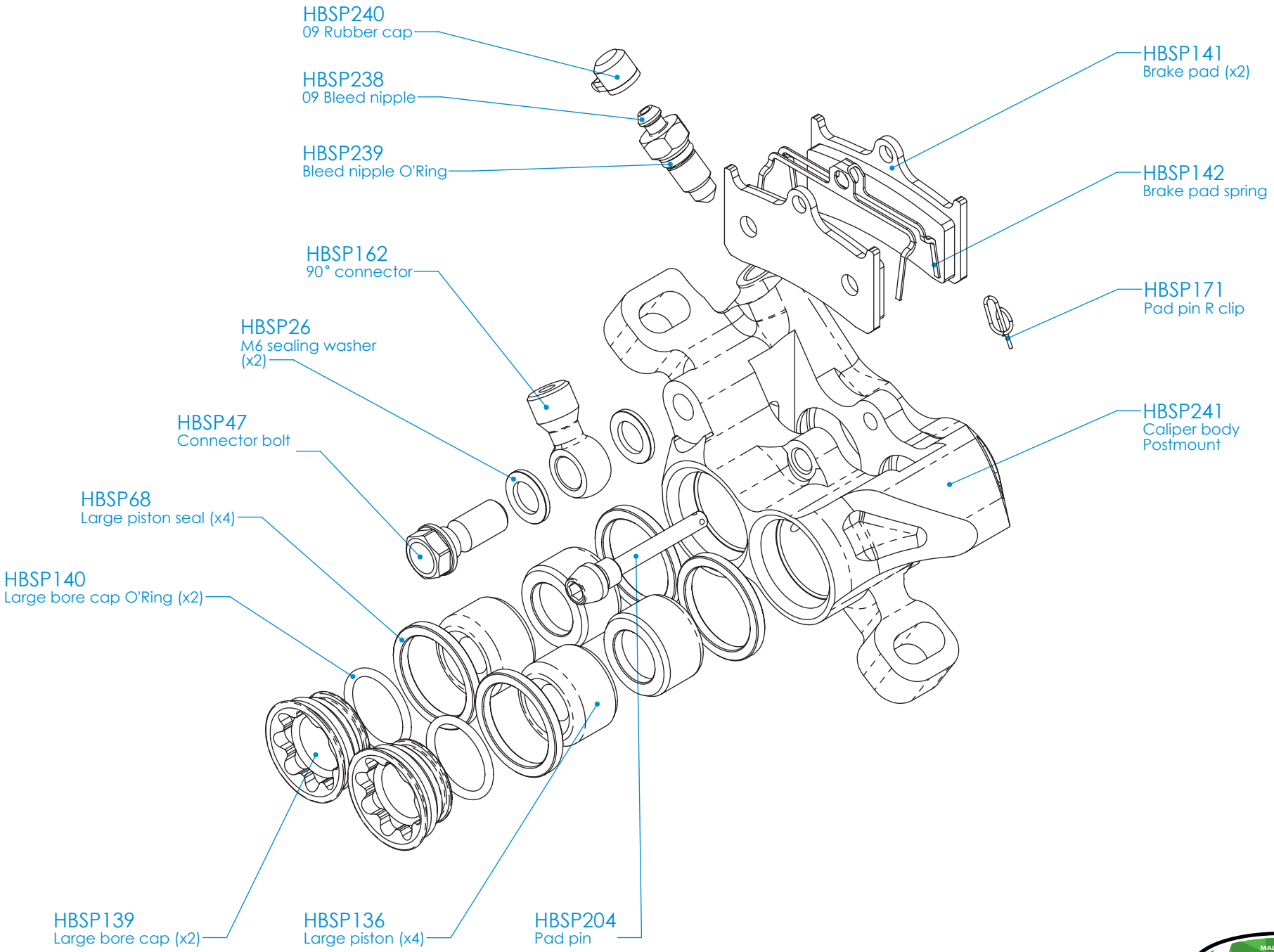
HBSP240
09 Rubber cap
HBSP238
09 Bleed nipple
HBSP239
Bleed nipple O'Ring
HBSP162
90° connector
HBSP26
M6 sealing washer
(x2)
HBSP47
Connector bolt
HBSP68
Large piston seal (x4)
HBSP140
Large bore cap O'Ring (x2)
HBSP139
Large bore cap (x2)
HBSP136
Large piston (x4)
HBSP204
Pad pin
HBSP141
Brake pad (x2)
HBSP142
Brake pad spring
HBSP171
Pad pin R clip
HBSP241
Caliper body
Postmount