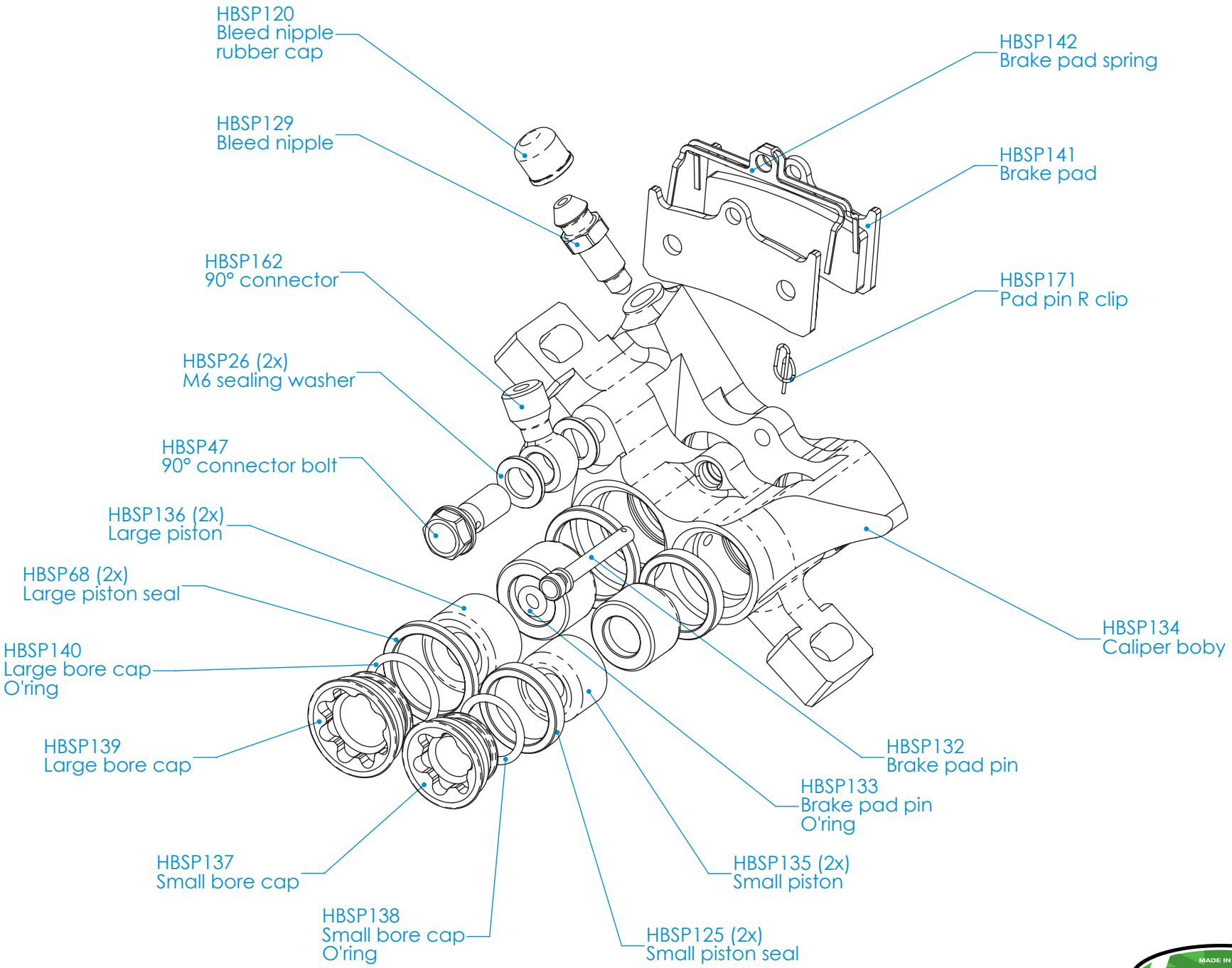
HBSP120
Bleed nipple
rubber cap
HBSP129
Bleed nipple
HBSP162
90° connector
HBSP26 (2x)
M6 sealing washer
HBSP47
90° connector bolt
HBSP136 (2x)
Large piston
HBSP68 (2x)
Large piston seal
HBSP140
Large bore cap
O'ring
HBSP139
Large bore cap
HBSP137
Small bore cap
HBSP138
Small bore cap
O'ring
HBSP125 (2x)
Small piston seal
HBSP135 (2x)
Small piston
HBSP133
Brake pad pin
O'ring
HBSP132
Brake pad pin
HBSP134
Caliper boby
HBSP171
Pad pin R clip
HBSP141
Brake pad
HBSP142
Brake pad spring