PRO5 FREEHUB ASSEMBLY
E-BIKE_HG_54

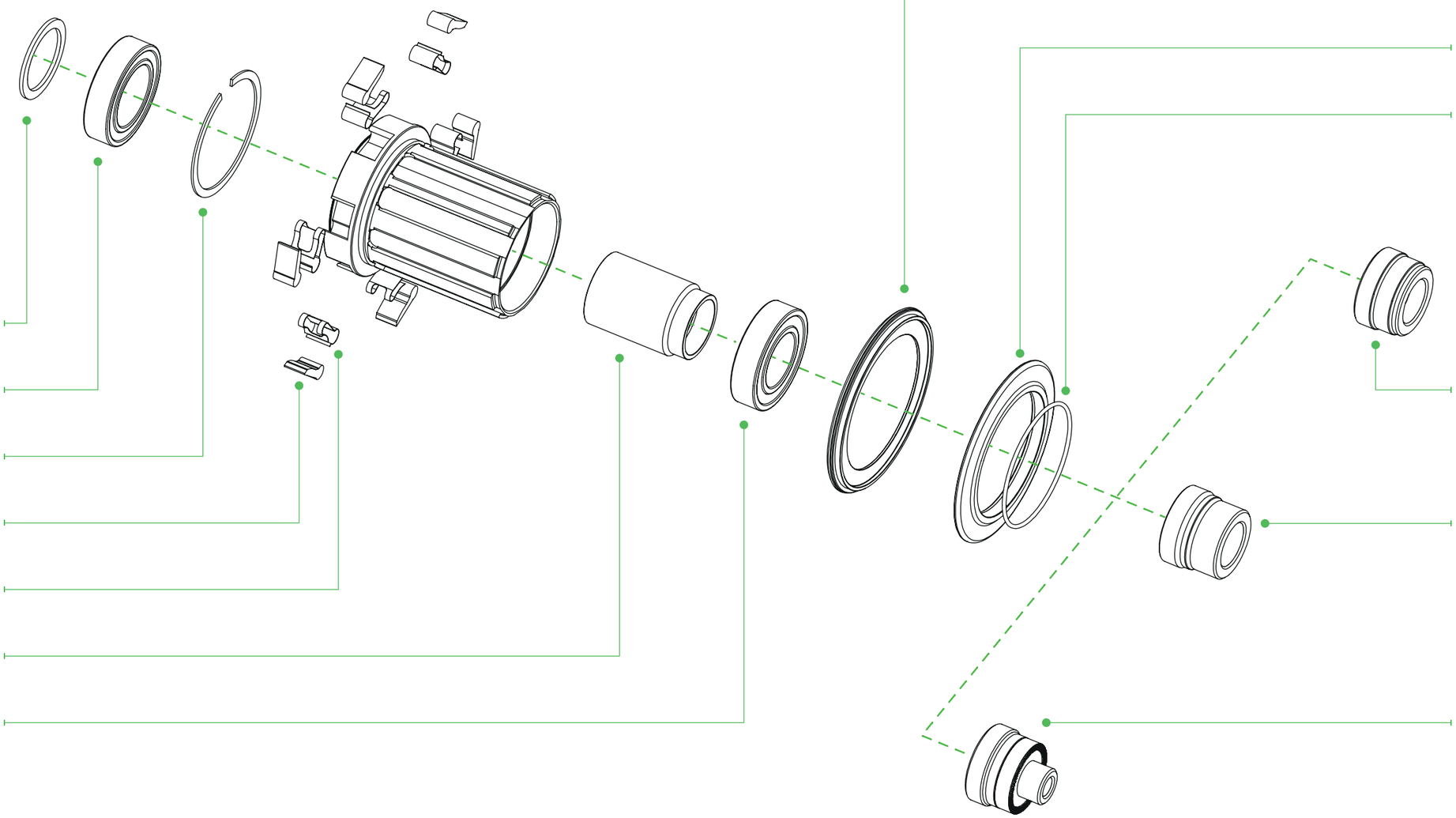

HUB1009-18
1mm Barrel Spacer

17287
17x28x7 Bearing

XVSM-32SS
Freehub Snap Ring

HUB1009-26
Pawl (x6)

HUB1018-33
Pawl Spring (x6)

HUB1018-53
11spd/XD Barrel Spacer

S15287
15x28x7 Bearing

HUB1018-34
Freehub Seal

HUB1018-41
11SPD/XDR Freehub Seal Cover

O'Ring
Ø31x1

HUB1018-44
12mm DS Spacer

HUB1018-45
X12 DS Spacer

HUB1018-42
QR DS Spacer

REF: HUB556